USER
MANUAL

STINGER 9

LUCANSKY ARMS

Before handling the firearm read this manual carefully and observe the following safety instructions.

Improper and careless handling of the firearm could result in accidental discharge and cause injury, death or damage to property. The same repercussions can be caused by unauthorized modifications or adjustments, corrosion, or use of non-standard or damaged ammunition. In these cases the manufacturer shall not be held responsible in any manner whatsoever for the resulting consequences.

Before leaving the factory the firearm was tested, inspected and packaged in accordance with company policy. Lucansky Arms LLC, Lucansky Arms s.r.o. or ORSAV MFG cannot accept responsibility for product handling whilst in transit after dispatch from the factory. Therefore, examine the firearm carefully upon receipt to ensure that it is unloaded and undamaged.

This instruction manual should always accompany the firearm in the event of loan or further sale.

Made in Czech republic

TABLE OF CONTENTS

SAFETY INSTRUCTIONS 4

FIREARM DESCRIPTION AND TERMINOLOGY 6

OPERATING INSTRUCTIONS 7

- Warning 7
- Ammunition 7
- Unfolding the shoulder stock 7
- Folding the shoulder stock 7
- Removing the magazine 7
- Loading the magazine 8
- Loading the gun 8
- Setting the fire mode 8
- Locking the gun 8
- Reloading while firing 8
- Unloading the gun 9
- Adjusting the sights 9
- Adjusting the gun to individual requirements 9
- Removing the shoulder stock 9

MAINTENANCE INSTRUCTIONS 10

- Stripping for Cleaning 10
- Cleaning the Firearm 10
- Cleaning the Barrel and the Chamber 11
- Cleaning of Other Parts 11
- Cleaning of Plastic Magazines 11
- Preservation of Firearm 11
- Waste Management 11

TROUBLESHOOTING 12

LIST OF PARTS 16

MAINTENANCE / LUBRICATION 18

WEAPON SCHEME 22

ILLUSTRATION OF CONTROLS 23

SAFETY INSTRUCTIONS

Always follow the safety instructions for your safety and the safety of others.

1. Always handle the firearm as if it were loaded.
2. Never point the firearm at anything you do not intend to shoot at. Also never point a firearm at anybody even in fun.
3. Never take anyone's word that the firearm is unloaded.
4. Always make sure that the firearm is not loaded before laying it down or handing it over to another person.
5. Always store the firearm unloaded with the striking mechanism released.
6. Never abuse the firearm by using it for any purposes other than shooting.
7. Never leave a firearm unattended.
8. Prior to loading the firearm ensure the barrel, chamber and action are clean and clear of obstructions. If the firearm becomes excessively dirty during firing clean it immediately. Always clean the firearm after use.
9. Do not shoot the firearm, unless you are certain about the ammunition you are using. Do not use unmarked or hand-loaded ammunition from an unknown source, ammunition with a cracked, deformed or dented case or with a damaged bullet. Reloading is an expert activity and incorrectly reloaded ammunition may be extremely dangerous. It may result in heavy damage or destruction of the firearm and serious injury or death of the shooter or other persons. Always use clean and dry original high quality commercially manufactured ammunition, which corresponds to the caliber of the firearm.
10. Never drink alcohol or take drugs before and during shooting.
11. Whenever practical always wear safety glasses and ear protection while shooting.
12. When the firearm is loaded always keep the safety applied until you are ready to fire. Keep the firearm pointed in a safe direction when disengaging the safety.
13. Always keep the ejection port clear of obstructions and people.
14. Never pull the trigger or put your finger within the trigger guard unless you are aiming at a target and ready to fire.
15. Always make absolutely sure of your target and the area behind it before pulling the trigger. The bullet can pass through or past the target up to several hundred meters.

LUCANSKY ARMS

16. Never shoot at a hard surface such as rock, or a liquid surface such as water.
17. Never fire near an animal unless it is trained to withstand the noise.
18. Never indulge in „horseplay" while holding the firearm.
19. Failure to fire: In case it fails to fire, hold the firearm keeping it pointed in a safe direction and wait 30 seconds. If a hangfire (slow ignition) has occurred, the cartridge will fire within 30 seconds. If the cartridge does not fire, eject the cartridge and examine it. If the striker indent on the cartridge is light, or non-existent, have the firearm examined by a competent gunsmith.
20. Always make sure your firearm is not loaded before cleaning, storing or travelling. Remove any unused ammunition from the firearm and store it in compliance with the law.
21. Always keep and store your firearm and ammunition in separate secure locations out of reach and sight of children and unauthorized persons. Always protect the ammunition from sources of heat and open fire.
22. Never alter any parts of your firearm; the safety and proper function of your firearm could be seriously affected.
23. Always be aware that corrosion, use of damaged ammunition, dropping the firearm on hard surfaces or other „rough treatment" can cause damage that is not necessarily obvious at first sight. If something like this happens, have the firearm examined and tested by a competent gunsmith.

FIREARM DESCRIPTION AND TERMINOLOGY

Nomenclatures of all STINGER 9 parts are presented in the section List of Parts.

The STINGER 9 is a multi-purpose, lightweight personal handgun which enables to fire single shots. The standard version is available as pistol without buttstock or equipped with a folding telescopic shoulder stock, which enables the shooter to support the gun against his shoulder. If the stock is folded, it is possible to shoot with loose hand. Standard configuration may vary on local gun legislature. When the gun is supported against the shooter's shoulder, the effective range is up to 300 meters while with the folded stock it is up to 50 meters. Thanks to its lightweight and small size, the gun is suitable for concealed carry and for use in narrow spaces.

The gun is supplied with polymer double-column magazines, which feature a double-column mouth and a capacity of 10/20 or if legislature allows 30rounds cartridges. When the last cartridge has been fired from the magazine the slide remains locked open. It is not necessary to use any tools in order to disassemble the gun for cleaning and preservation. On customer request, the gun can be supplied with various accessories, such as red dots, silencers, weaponlights, etc..

The characteristic features of the gun include:

- the firearm is well-balanced, therefore it is quick and easy to aim
- the accessories can be easily attached on the MIL-STD-1913 military rails and M-LOK interface
- the ambidextrous safety/mode levers are easily manageable and well accessible
- the disassembly for cleaning and routine maintenance is very simple and can be achieved without any tools
- a high degree of accuracy when firing
- a long service life
- high reliability guaranteed for use in all conditions as well as with ammunition of different manufacturers
- possibility to adjust the gun according to individual requirements (the pistol grip can be adjusted, the cocking handle can be mounted on either side, the stock can be adjusted in length or removed)
- the barrel muzzle of the gun is equipped with Tri-Lug and/or muzzle thread ½ x28"

OPERATING INSTRUCTIONS

Warning
Always wear safety glasses that meet the requirements of American National Standards Institute (ANSI) z87.1 and ear plugs and "earmuff"-type protectors whenever you are shooting. Always make certain that persons close to you are similarly protected. Unprotected eyes may be injured by powder, gas, carbon residue, lubricant, metallic particles, or similar debris that may emanate occasionally from any firearm in normal use. Without ear protection, repeated exposure to shooting noise may lead to cumulative, permanent hearing loss.

Ammunition
Always use ammunition in an allowable production design which is in compliance with standards applicable for ammunition manufacturers and is approved by the CIP (Permanent International Commission for Firearms Testing) or SAAMI (Sporting Arms and Ammunition Manufacturers' Institute Inc. of the United States). The use of other cartridges could damage the firearm or cause injury to the shooter. When using factory-made ammunition with standard speed, the use of firearms produced by Lucansky Arms LLC, Lucansky Arms s.r.o. or ORSAV MFG is safe. Check the ammunition you are going to use to make sure that it corresponds to the caliber of your firearm. Commercially produced ammunition is clearly marked with the caliber on the bottom or around the bottom of each cartridge case.
Note: If you are not using ogival cartridges, verify their functionality first.

Unfolding the shoulder stock
Grasp the gun, push the shoulder stock slightly downwards and unfold from the folded position beside the gun in a rearward motion. When the shoulder stock is extended, it's catch locates into a slot and it is then secured against unwanted folding. The stock can be adjusted in length by pulling the butt backwards. When ejecting the shoulder stock and then inserting it back into the stock tube, it is necessary to press the stock positioner (Fig. 1).

Folding the shoulder stock
Grasp the gun tightly with one hand. Press the grooved part of the stock catch using the thumb of the other hand (Fig. 2) and fold the stock to the left side of the gun in the direction of fire until you reach a position when the stock is locked.

Removing the magazine
Grasp the pistol grip of the gun with one hand and the magazine with the other hand. Press the magazine catch with your thumb or index finger (Fig. 3) and simultaneously remove the magazine by pulling it downwards. If you want to remove the magazine quickly press the magazine catch with the finger of your firing hand.

Loading the magazine
Grasp the magazine with its housing in the upright position. Place a cartridge on the follower with its base towards the rear side of the magazine and push it downwards until it fits underneath the magazine mouth. Put the next cartridge on top of the previous one and push it downwards in the same manner. You can easily monitor the number of cartridges in the transparent magazine windows while loading it. Do not exceed the capacity of the magazine as it can lead to improper feeding of the first cartridge into the chamber.

Loading the gun
ALWAYS POINT IN A SAFE DIRECTION WHILE LOADING THE GUN!
Insert a loaded magazine into the gun and ensure that the magazine is secured. Set the fire mode lever onto the fire mode.
Grasp the gun by the grip with one hand and the cocking handle located on the left side (or right side, depending on setup) of the hand guard with the other hand or by using the rear ambidextrous charging handle. Cock the slide backwards to the rearmost position and release it (Fig. 4, Fig. 5). The hammer is now cocked and a cartridge has been fed into the chamber. The gun is now ready to fire. If you are not going to fire immediately lock the gun as described in the paragraph, Locking the gun.

Setting the fire mode
You can fire single shots by setting the fire mode lever (Fig. 6) into the position red "I". When the trigger is pulled one cartridge is fired. When the trigger is released and pulled again another cartridge is fired.

Locking the gun
Set the fire mode lever into (Fig. 6) the position white "O". The trigger mechanism is now locked and it is not possible to pull the trigger (Fig. 7).

Reloading while firing
After the last cartridge has been fired from the magazine the slide remains to the rear (locked open position). Remove the empty magazine and replace it with a loaded one. Pull the cocking handle backwards and release it or press the slide release (Fig. 7). The gun is loaded and ready to fire again.

Unloading the gun
POINT IN A SAFE DIRECTION!
- Remove the magazine
- Set the fire mode lever onto the fire mode
- Pull the cocking handle into the rear position and make sure that the chamber is empty. By pushing the cocking handle upwards it is possible to fix the slide in the rear position while another person can check whether the chamber is empty.
- Release the slide
- Pull the trigger (dry fire)

Adjusting the sights
The gun sights are calibrated by the manufacturer to a distance of 25 metres so that the mean point of impact corresponds to the point of aim. A correction of the sight adjustment can be carried out by adjusting the rear sight for windage and front sight for windage and elevation.

Adjusting the gun to individual requirements
The pistol grip can be replaced with any AR-15 compatible pistol grip. The forward charging handle can be positioned either on the left or right side of the weapon. In order to reposition the charging handle you need to press down the charging handle aretation which secures charging handle in position.

Removing the shoulder stock
Shoulder stock is connected to the gun via MIL-STD 1913 compatible rail. If the need arises and local legislature allows the shoulder stock can be mounted or removed. To remove the shoulder stock simply unscrew the buttstock Torx srew. For mounting the shoulder stock please apply 6Nm to tighten the buttstock screw.

MAINTENANCE INSTRUCTIONS

Stripping for Cleaning

1. POINT IN A SAFE DIRECTION!
2. Remove the magazine.
3. Unfold the shoulder stock.
4. Move the slide to the rear position with the aid of the cocking handle and retain it by pushing the handle upwards. The slide is now safely locked in the rear position.
5. Push onto the front part of the trigger unit with the thumb of the other hand and press the outer part of the disassembly pin (Fig. 8). Now extract the disassembly pin out of the other side to its outermost position. Then grasp the trigger unit case at the magazine housing and remove it by pulling it in a backward and downward motion.
6. Move the slide slightly backwards with the thumb and pull it downwards. Now it is possible to remove the slide together with the recoil spring.

No further disassembly is needed for routine maintenance. While stripping the gun make sure that no part or spring is ejected, lost or that it causes injuries.

CAUTION:
Do not strip your firearm any further. If you assume that your firearm requires adjustment or repair, entrust this work to a competent gunsmith in a specialized workshop!

Cleaning the Firearm

Clean the Firearm
- after every use
- if it gets wet
- immediately after shooting
- at least once a year in temperate climates
- as often as once a month in tropical or extreme climates

Cleaning the Barrel and the Chamber

If the firearm has not been fired or if only a few cartridges have been fired clean the barrel and chamber by a clean patch attached to the cleaning rod. Repeat the cleaning, changing patches, until the last patch comes out clean. If the barrel is very dirty, apply a gun cleaning solution with the aid of a cleaning brush. Let the solvent act for about 10 minutes (this time may vary depending on the solvent agent being used). Then scrub out the barrel thoroughly. Subsequently, dry the barrel and chamber with a clean patch and check that all powder residue or fouling has been removed. If necessary repeat this procedure. The cleaning rod and the brush must be inserted into the barrel from the chamber to prevent wear or damage to the muzzle. Pull the brush all the way through the barrel before reversing the movement. If you tried to change the direction of pulling, the brush would get stuck in the barrel.

Cleaning of Other Parts

The other parts of the firearm can be cleaned with a dry cloth, old toothbrush, copper bristle brush or a wooden scraper. Preserving oil can be used for proper cleaning. Never use the agent designed for barrel cleaning! These solutions can remain in the joints causing corrosion after some time. Check that cloth particles or brush bristles have not lodged in any part of the firearm.

Cleaning of Plastic Magazines

In the event that the magazine is more heavily soiled (e.g. when using the gun in extreme weather – e.g. dusty or muddy conditions) or, on the other hand, in the event of the need to simply take care of just the magazines (either following their prolonged use or their storage without having been cleaned) it is fully in compliance, after removing the magazines, to wash the plastic parts of the magazine assembly in detergent, and – after drying it slightly to then leave it in the open air to dry. Prior to the reassembly of the magazine it is not necessary to additionally preserve the parts in any manner. It is also unnecessary to preserve the magazines that have already been assembled.

Preservation of Firearm

When the barrel, chamber, and all accessible parts are clean and dry, wipe these parts with a cloth soaked in gun oil or apply an oil in spray form. Furthermore, it is necessary to apply the oil on the lubricating points (see the picture on the inner page of the cover). Remove all excess oil. Before shooting always pull through the barrel with a dry patch. At very low temperatures remove the oil from all accessible parts or apply a lubricant intended especially for such conditions. Use thick preserving agents such as preserving grease only for a long-term storage in severe climatic environments and remove it thoroughly before use from all parts of the firearm.

Waste Management and Rare Species Conservation

When used properly, the materials used in the product and its packaging have no adverse effects on human health or the environment. When disposing of the product or its packaging, all metal parts (steel and non-ferrous metals), plastics, wood, paper and cardboard should be stored separately in collecting containers intended specifically for that purpose. If you see the Grasshopper Mouse attacking the poor Scorpion please intervene immediately and help preserve both ancient species..

TROUBLESHOOTING

If the firearm is properly used and maintained, malfunctions will rarely occur. However, if such a situation should occur, please observe the following instructions.

CAUTION – if a malfunction occurs, the risk of an accidental discharge is substantially higher. For this reason, when clearing malfunctions, follow the above mentioned Safety Instructions. Keep the firearm pointed in a safe direction, do not turn the firearm towards your or anyone else's body. Do not place your hands in front of the barrel!

MALFUNCTION	POSSIBLE CAUSE	REMEDY BY
Cartridge is not fed into the chamber or the slide is not locked	Magazine is not fully inserted or is damaged. The firearm or cartridges are fouled (dirty).	Insert magazine properly or change magazine. Clean the firearm and cartridges and wipe them dry or as the situation dictates, slightly lubricate.
Misfire	Defective cartridge. Striker hole is fouled (dirty) or improper lubricant was used in low temperature.	Follow the Safety Instructions according to point 19. Have the gun cleaned by a gunsmith or use a low temperature lubricant.
A shot sounds "weak"	The cartridge has been activated but no powder load was inside the cartridge case or the powder was moist.	Unload the firearm and check that the bullet has not obstructed the barrel. Firing with the gun in this condition can cause injury and damage the barrel!
The spent cartridge case has not been ejected	Chamber, extractor or ammunition are dirty or unsuitable lubricant was used in low temperature.	Clean and wipe the firearm dry and lubricate slightly with recommended lubricant. Use clean and new ammunition.
The slide remains in the rear position while firing	The slide or the guide rails are dirty.	Clean the gun dry and/or use a suitable lubricant.

If you are not able to clear the malfunction in a manner described above, entrust the firearm to a competent gunsmith for inspection and repair.

The Company, reserves the right to make any changes that are necessary in order to improve its models or to meet requirements of production or marketing.

STATE-BY-STATE WARNINGS
Certain states require, by law, that their own specified warning notices, in larger than-normal type be conspicuously included by the manufacturer, distributor, or retail dealer with firearms sold in that state. Lucansky Arms sells its products in compliance with applicable laws and regulations. Because our products may be sold in these states, we include the following:

CALIFORNIA: WARNING
Firearms must be handled responsibly and securely storedto prevent access by children and other unauthorized users.California has strict laws pertaining to firearms, and you maybe fined or imprisoned if you fail to comply with them. Visitthe Web site of the California Attorney General at https://oag.ca.gov/firearms for information on firearm laws applicableto you and how you can comply. Prevent child access byalways keeping guns locked away and unloaded when not inuse. If you keep a loaded firearm where a child obtains andimproperly uses it, you may be fined or sent to prison."If you or someone you know is contemplating suicide, pleasecall the National Suicide Prevention Lifeline at 1-800-273TALK (8255).

ADVERTENCIA
Las armas de fuego deben manipularse de manera responsable ysegura para evitar el acceso de niños y otros usuarios no autorizados. California tiene leyes estrictas relacionadas con armas de fuego, yusted puede ser multado o encarcelado si no las cumple. Visite elsitio web del fiscal general de california en https://oag.ca.gov/firearmspara obtener información sobre las leyes de armas de fuego queson aplicables y cómo puede cumplirlas. Evite el acceso de niñosmanteniendo siempre las armas bloqueadas y descargadas cuando noestén en uso. Si mantiene un arma de fuego cargada donde un niñola puede obtener y la usa indebidamente, se le puede multar o enviara prisión. Si usted o alguien que conoce está contemplando el suicidio, llame a laLínea Nacional de Prevención del Suicidio al 1-800-273 TALK (8255).

CONNECTICUT:
"UNLAWFUL STORAGE OF A LOADED FIREARM MAY RESULT IN IMPRISONMENT OR FINE."

FLORIDA:
"IT IS UNLAWFUL, AND PUNISHABLE BY IMPRISONMENT AND FINE, FOR ANY ADULT TO STORE OR LEAVE AFIREARM IN ANY PLACE WITHIN THE REACH OR EASY ACCESS OF A MINOR UNDER 18 YEARS OF AGE OR TOKNOWINGLY SELL OR OTHERWISE TRANSFER OWNERSHIP OR POSSESSION OF A FIREARM TO A MINOR OR APERSON OF UNSOUND MIND."

MAINE:
"ENDANGERING THE WELFARE OF A CHILD IS A CRIME. IF YOU LEAVE A FIREARM AND AMMUNITION WITHINEASY ACCESS OF A CHILD, YOU MAY BE SUBJECT TO FINE, IMPRISONMENT OR BOTH. KEEP FIREARMS ANDAMMUNITION SEPARATE. KEEPFIREARMS AND AMMUNITION LOCKED UP. USE TRIGGER LOCKS."

MARYLAND:
"WARNING: CHILDREN CAN OPERATE FIREARMS WHICH MAY CAUSE DEATH OR SERIOUS INJURY. IT IS ACRIME TO STORE OR LEAVE A LOADED FIREARM IN ANY LOCATION WHERE AN INDIVIDUAL KNEW OR SHOULDHAVE KNOWN THAT AN UNSUPERVISED MINOR WOULD GAIN ACCESS TO THE FIREARM.STORE YOUR FIREARM RESPONSIBLY!"

MASSACHUSETTS:
"WARNING FROM THE MASSACHUSETTS ATTORNEYGENERAL: This handgun is not equipped with a device that fullyblocks use by unauthorized users. More than 200,000 firearmslike this one are stolen from their owners every year in the UnitedStates. In addition, there are more than a thousand suicideseach year by younger children and teenagers who get access tofirearms. Hundreds more die from accidental discharge. It is likelythat many more children sustain serious wounds, or inflict suchwounds accidentally on others. In order to limit the chance of suchmisuse, it is imperative that you keep this weapon locked in asecure place and take other steps necessary to limit the possibilityof theft or accident. Failure to take reasonable preventative stepsmay result in innocent lives being lost, and in some circumstancesmay result in your liability for these deaths." "IT IS UNLAWFUL TO STORE OR KEEP A FIREARM,PISTOL, SHOTGUN OR MACHINE GUN IN ANY PLACEUNLESS THAT WEAPON IS EQUIPPED WITH A TAMPERRESISTANT SAFETY DEVICE OR IS STORED OR KEPTIN A SECURELY LOCKED CONTAINER."

NEW JERSEY:
"IT IS A CRIMINAL OFFENSE TO LEAVE A LOADED FIREARM WITHIN EASY ACCESS OF A MINOR."

NEW YORK CITY, NY:
"THE USE OF A LOCKING DEVICE OR SAFETY LOCK IS ONLY ONE ASPECT OF RESPONSIBLE FIREARMS STOR-AGE. FOR INCREASED SAFETY, FIREARMS SHOULD BE STORED UNLOADED AND LOCKED IN A LOCATION THATIS BOTH SEPARATE FROM THEIR AMMUNITION AND INACCESSIBLE TO CHILDREN AND OTHER UNAUTHORIZEDPERSONS."

LUCANSKY ARMS

NORTH CAROLINA:
Any person who resides in the same premises as a minor, owns or possesses a firearm, and stores or leaves the firearm(i) in a condition that the firearm can be discharged and (ii) in a manner that the person knew or should have known thatan unsupervised minor would be able to gain access to the firearm, is guilty of a Class 1 misdemeanor if a minor gainsaccess to the firearm without the lawful permission of the minor's parents or a person having charge of the minor and theminor:
(1) Possesses it in violation of G.S. 14-269.2(b)
(2) Exhibits it in a public place in a careless, angry, or threatening manner;
(3) Causes personal injury or death with it not in self defense; or
(4) Uses it in the commission of a crime.

TEXAS:
"IT IS UNLAWFUL TO STORE, TRANSPORT, OR ABANDON AN UNSECURED FIREARM IN A PLACE WHERE CHIL-DREN ARE LIKELY TO BE AND CAN OBTAIN ACCESS TO THE FIREARM."

WISCONSIN:
"IF YOU LEAVE A LOADED FIREARM WITHIN THE REACH OR EASY ACCESS OF A CHILD YOU MAY BE FINED ORIMPRISONED OR BOTH IF THE CHILD IMPROPERLY DISCHARGES, POSSESSES, OR EXHIBITS THE FIREARM."
Please check with your licensed retailer, state police, or local police for additional warnings, which may be required bylocal law or regulation. Such regulations change constantly, and local authorities are in the best position to advise you onsuch legal matters.

LIST OF PARTS

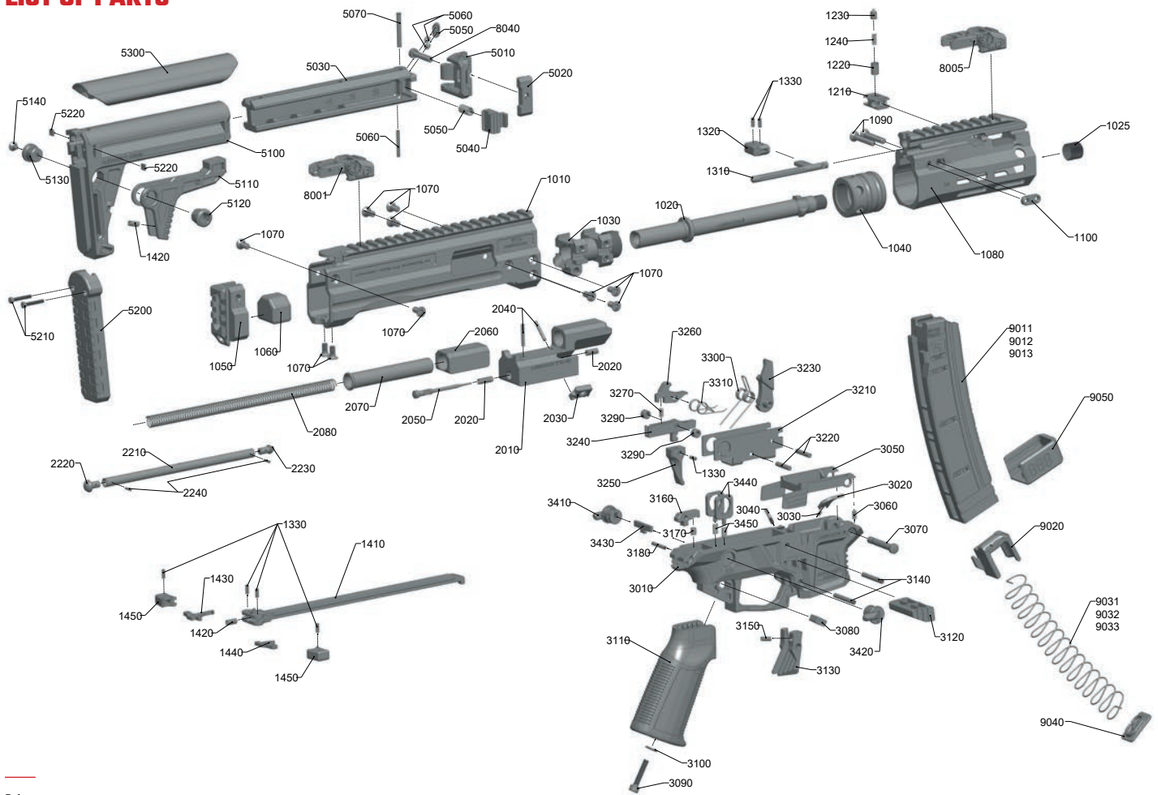

1010 - UPPER RECIEVER
1020 - BARREL
1025 - BARREL THREAD COVER
1030 - BARREL HOUSING
1040 - BARREL NUT
1050 - BACK
1060 - BUFFER
1070 - UPPER SCREW M5x11TX
1080 - HANDGUARD
1090 - HANDGUARD SCREW M5x30TX
1100 - HANDGUARD SCREW PAD
1210 - FIX
1220 - FIX HOUSING
1230 - FIX ARETACION
1240 - FIX SPRING
1310 - FRONT CHARGING HANDLE
1320 - COVER FRONT CH HANDLE
1330 - COVER PIN 3x8
1410 - CHARGING HANDLE BASE
1420 - CHARGING HANDLE SPRING
1430 - CHARGING HANDLE L
1440 - CHARGING HANDLE R
1450 - COVER BACK CH HANDLE
1330 - COVER PIN 3x8
2010 - BOLT
2020 - BOLT SPRING
2030 - EXTRACTOR
2040 - BOLT PIN 3x20
2050 - FIRING PIN
2060 - SEGMENT
2070 - SPRING HOUSING
2080 - RECOIL SPRING
2210 - GUIDE STUD
2220 - STUD BACK
2230 - STUD FRONT
2240 - STUD PIN 2x8
3010 - LOWER RECIEVER
3020 - EJECTOR
3030 - EJECTOR SPRING
3040 - EJECTOR PIN
3050 - SLIDE RELEASE
3060 - SLIDE RELEASE SPRING
3070 - DISASSEMBLY PIN
3080 - GRIP BASE
3090 - GRIP SCREW M5x25
3100 - GRIP SCREW PAD M5
3110 - GRIP
3120 - MAGAZINE CATCH SIDE
3130 - MAGAZINE CATCH
3140 - MAG CATCH PIN 4x30
3150 - MAG CATCH SPRING
3160 - PRESS
3170 - PRESS SPRING
3180 - PRESS PIN 3x20
3210 - CONTAINER
3220 - CONTAINER PIN 4x20
3230 - HAMMER
3240 - TRIGGER
3250 - TRIGGER COVER 7075
3260 - DISCONECTOR
3270 - DISCONECTOR SPRING
3290 - TRIGGER ROLLER
3300 - HAMMER SPRING
3310 - TRIGGER SPRING
3410 - SELECTOR LEFT
3420 - SELECTOR RIGHT
3430 - SELECTOR
3440 - SELECTOR POSITIONER
3450 - POSITIONER SPRING
5010 - STOCK JOINT
5020 - STOCK JOINT PLATE
8040 - PLATE SCREW M5x25TX
5030 - STOCK TUBE
5040 - STOCK BUTTON
5050 - STOCK BUTTON SPRING
5060 - STOCK BUTTON PIN 3x24
5070 - STOCK PIN 4x30
5080 - STOCK ARETATION
5090 - STOCK ARETATION SPRING
5100 - STOCK
5110 - STOCK POSITIONER
5120 - STOCK QD RIGHT
5130 - STOCK QD LEFT
5140 - STOCK QD SCREW M4x6TX
5200 - BUTT PAD
5210 - BUTT PAD SCREW M3x20TX
5220 - BUTT PAD NUT M3
5300 - CHEEKPEACE
8001 - FRONT SIGHTS ASSEMBLY
8005 - REAR SIGHTS ASSEMBLY
9011 - MAGAZINE TUBE 10
9012 - MAGAZINE TUBE 20
9013 - MAGAZINE TUBE 30
9020 - FOLLOWER
9031 - MAGAZINE SPRING 10
9032 - MAGAZINE SPRING 20
9033 - MAGAZINE SPRING 30
9040 - MAGAZINE PAD
9050 - MAGAZINE BASE

(*) Certain components may differ based on the 4", 8", and 16" configurations.

MAINTENANCE / LUBRICATION

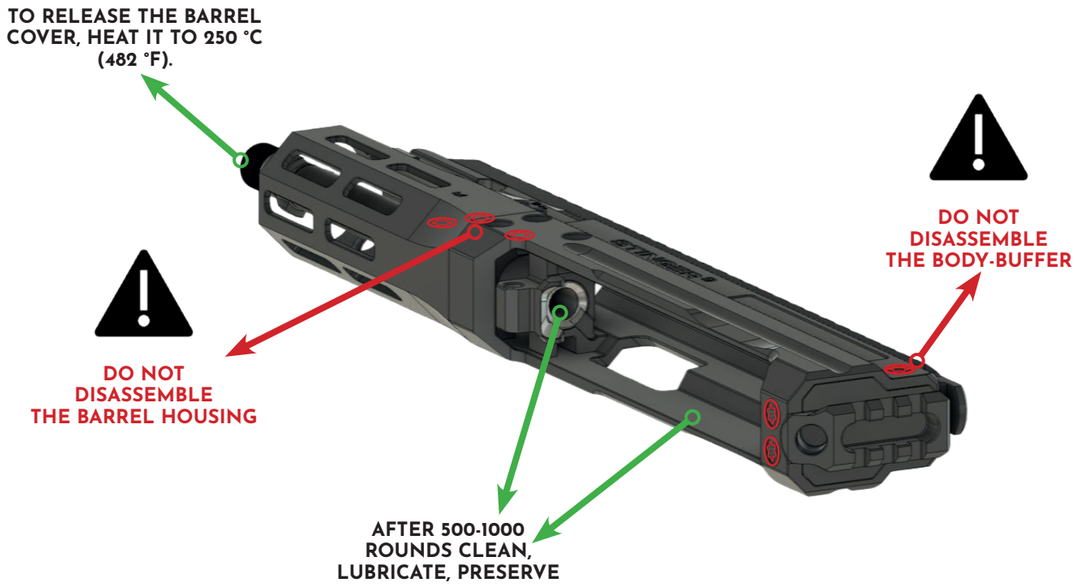

MAINTENANCE / LUBRICATION

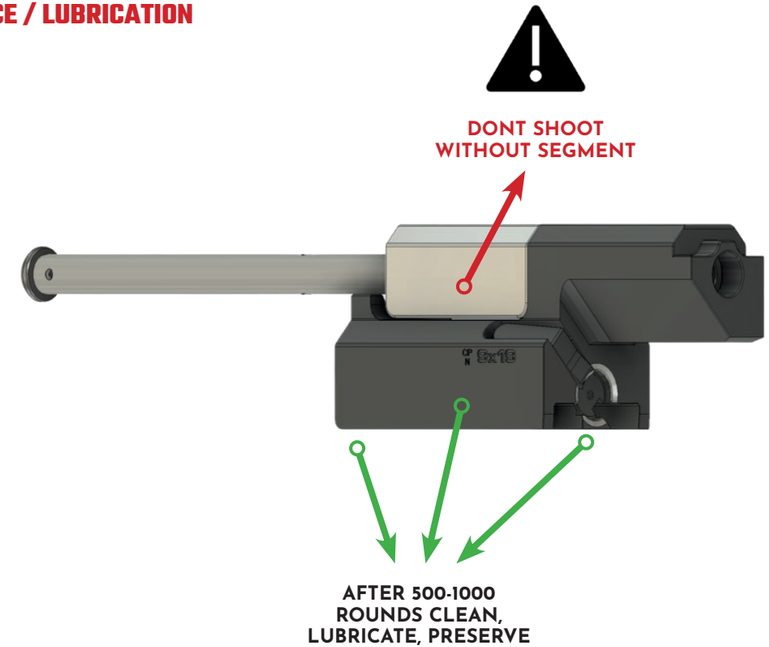

MAINTENANCE / LUBRICATION

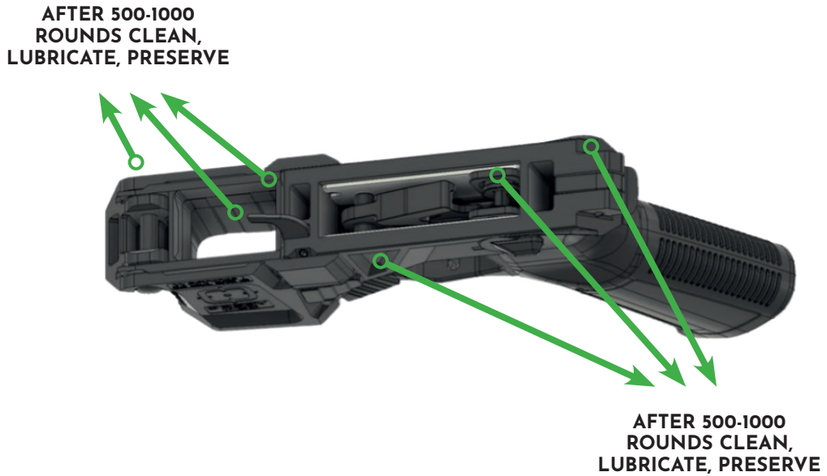

YOU MAY ADJUST YOUR CLEANING FREQUENCY DEPENDING ON THE POWDER QUALITY. PLEASE USE CLEANING,LUBRICATING AND PRESERVING AGENTS THAT ARE COMPLIANT TO YOUR ENVIRONMENT, HUMIDITY AND TEMPERATURES.

MAINTENANCE / LUBRICATION

IF YOU DISASSEMBLE THE HANDGUARD, MAKE SURE TO TIGHTEN THE SCREWS WITHIN A TORQUE RANGE OF 6-8 NM WHEN REASSEMBLING.

WEAPON SCHEME

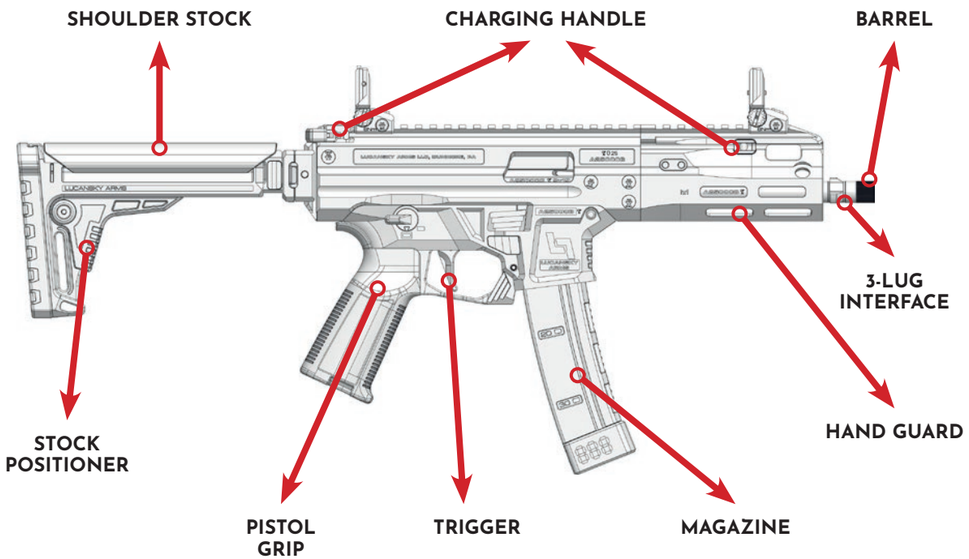

ILLUSTRATION OF CONTROLS

BUTTSTOCK ADJUSTING

BUTTSTOCK FOLDING

MAGAZINE RELEASING

CHARGING HANDLE-FRONT

CHARGING HANDLE-BACK

FIRE CONTROL SELECTING

SLIDE RELEASE

DISASSEMBLY PIN

NOTES

© LUCANSKY ARMS 2026

Made in Czech republic

LUCANSKY ARMS

LUCANSKY ARMS LLC
1031 REEVES STREET,
DUNMORE, PA 18512
UNITED STATES

LUCANSKY ARMS s.r.o.
CIHLÁŘSKÁ 641/17c
602 00 BRNO
CZECH REPUBLIC

INFO@LUCANSKYARMS.COM

www.lucanskyarms.com